EPOCH
Instruments & Controls Private Limited

Weight Transmitter User manual

Contact us :

EPOCH INSTRUMENTS AND CONTROLS PVT LTD

No. 16, Bhadrappa Estate, 54, Magadi Main Road, Kamakshipalya,

Bangalore - 560 079.

Ph : 080-23481364

Email : sales@epochloadcell.com

WEIGHT TRANSMITTER USER MANUAL VERSION-1.3

Initial Inspection

Ensure the following while opening the carton box: **a)** Weight Transmitter – 1No **b)** Connectors for ports (RS485, load cell) – 2Nos **c)** Side clamps – 2Nos **d)** User Manual – 1No

Indicator Front Panel View

The front panel of Weighing Transmitter appears similar to one shown below:

1 - LED Display

2 - MENU/ESC key - To enter into Menu from display(Password protected) & to back from menu options and parameter entries without storing entered values

3 - ENTER/TARE key - To enter into Menu options & Sub menus & to store the parameters values

4 - LEFT key - To select or move to the next cursor position in parameter values entry & to display peak weight value during the main display

5 - UP key - To select next option and to increase or decrease values & to reset the peak weight during the main display

6 - Status LED's

7 - Negative indication

STATUS LED's	Description	Status
-VE	• To indicate the current weight is +ve weight or –ve weight	ON → -ve weight OFF→+ve weight
OPEN	• To indicate the Load error(oPEn) (or) • To indicate the display weight is Peak weight or Current weight	ON(continuous)→Load Error ON(one time)→Peak weight OFF → Current weight
PWR	• To indicate the power is ON or not	ON → Power ON OFF → Power OFF

The rear panel of Weight Transmitter appears similar to one shown below:

Technical Specification

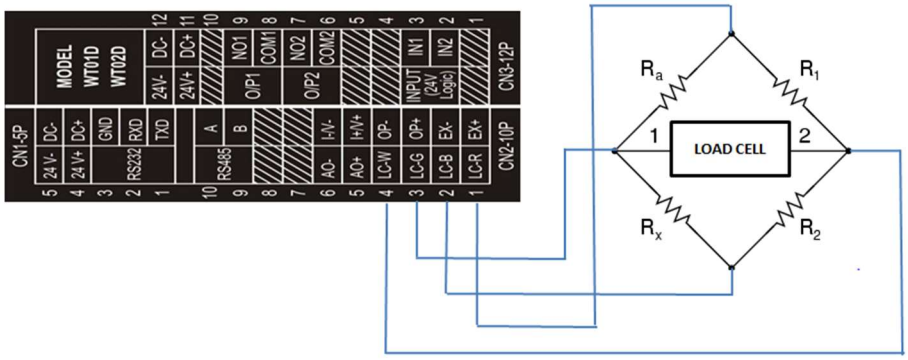

Specification	Description
Indicator Power	
Power Supply	24V DC Supply
Controller	High speed microcontroller
A/D Converter	
Type	24-bit Delta Sigma
Analogue Input Range	0.2mV to 25 mv
Linearity	<0.02% FS
Gain Drifting	2PPM/◦C
Conversion Rate	12.5 SPS
Display Accuracy	1/30,000
Display & Keypads	
LED Display	5 digits 7 Segment LED Display
Keypads	4 Keys, Menu/Esc Key, Enter Key, Up Key and Left Key.
Load cells	
Excitation	5 V DC
Mechanical Data	
Cabinet Size	129mm (L)*48mm (H)*96mm (W)
Panel Cutout Details	45mm (H)*92mm (W)
Net Weight	200 gm
Environmental	
Operating Temperature	-10◦C to 40◦C
Storage Temperature	-25◦C to 70◦C
Relative Humidity	90% R.H without dew
IP Level	Front panel IP 55

Menu Flow Diagram

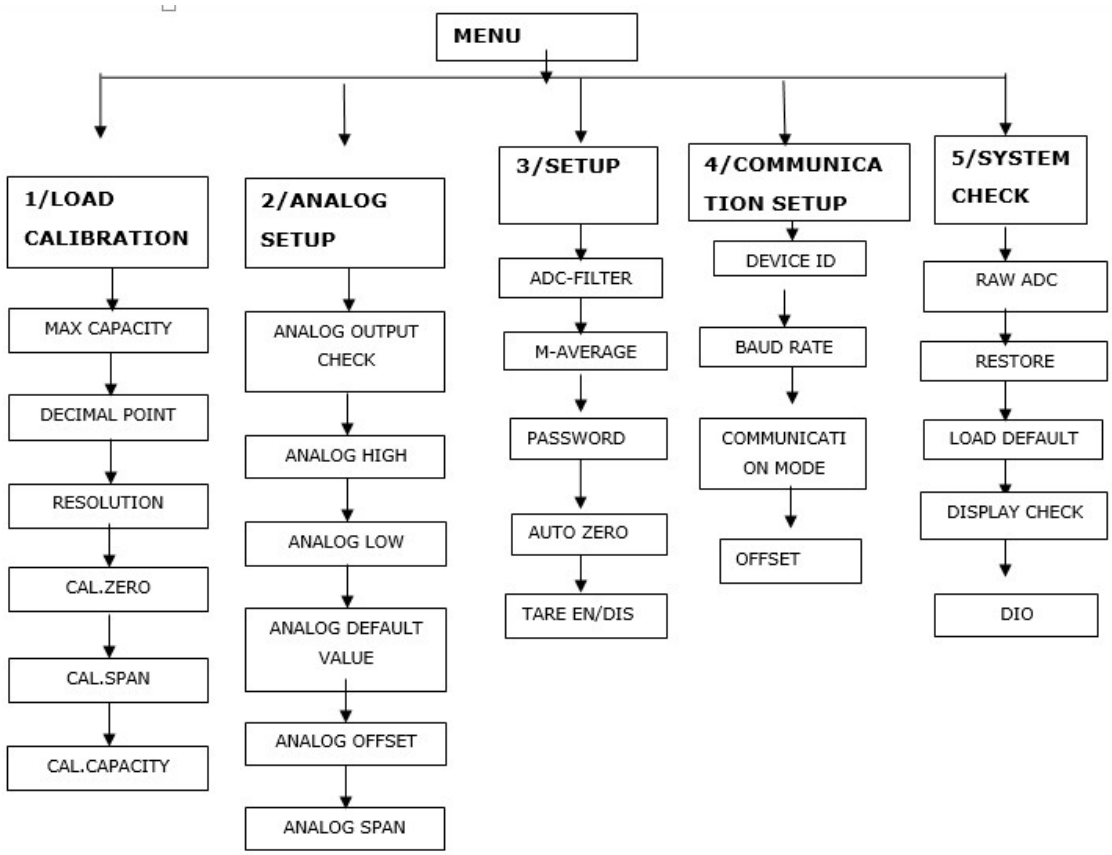

- Menu can be accessed by using the MENU key by pressing the key continuously for 2 sec.
- Calibration accesses through hardware lock protection. Please connect and short pin no. 2 and 3 in rear panel to enable calibration.
- Two different Load calibrations available “AUTO” & “MANUAL”. Difference, in manual calibration User need to enter Known weight count (without zero count) as span count.

LOAD CALIBRATION

- **Calibration accesses through hardware lock protection. Please short pin no. 7 and 8 in rear panel to enable calibration .**

Accessing menus requires entering the default factory set valid 3-digit password i.e. '000'. It is suggested that you change the password.

- You can enter the values by pressing "**UP**" or "**SHIFT**" keys.
- Press **ENTER/TARE** key to store the current value.
- Press **MENU/ESC** key to either return to previous menu or cancel the entered values.

This menu will help you to calibrate load.To access load calibration menu.

S.No	Instruction	Display
1.	• Press **MENU/ESC**and enter the default factory set password '000' and press **ENTER/TARE**.	000 ↵ CALIb
2.	• Navigate to *"AUto" or "nAnUL"* and press **ENTER/TARE**. • Two different Load calibrations available "AUTO" & "MANUAL". Difference, in manual calibration we have to enter the span count (Known weight count).	AUto ↵ NAnUL
3.	• Navigate to *Maximum Capacity (n-CAP)* and press **ENTER/TARE**. • Enter the max capacity of load cell within the range (0.01-999.99). E.g., '020.00'	n-CAP ↵ 020.00
4.	• Navigate to *Decimal Point (d-Pt)* and press **ENTER/TARE**. • Set the decimal value with the possible values of (0, 1, 2, 3).	d-Pt ↵ 2

5.	• Navigate to *Resolution (rSoL)* and press **ENTER/TARE**. • Set the resolution value with the possible values (1, 2, 5, 10, 20, 50 and 100). E.g., '2'.	rSoL ↵ 2
6.	• Navigate to *Cal. Zero (CAL-0)* and press **ENTER/TARE**. • Remove any load on load cell. LED displays ADC counts corresponding to the cal. Zero value. • Press **ENTER/TARE** to set Cal. Zero. When you calibrate Cal. Zero and Cal. Span, wait for LED to display stable raw ADC counts.	CAL-0 ↵ 1617
7.	Navigate to *Cal. Span (LoAd)* and press **ENTER/TARE**. **AUTO** Place a reference weight on the load cell, the LED displays ADC count corresponding to the weight. E.g., '6081'. **MANUAL:** User need to enter Known weight count (without zero count) as span count. • Press **ENTER/TARE** to set Cal. Span. Cal. Span counts should be greater than Cal. Zero + 50.	LoAd ↵ 6017
8.	• Navigate to *load Capacity* (L-CAP) and press **ENTER/TARE**. • Enter the reference weight that is used while calibrating Cal Span using up and left key. The range should be (0.01 to Max Capacity). E.g., '001.00' • System asks to take calibration backup (ConF?). If you want take backup then press **ENTER/TARE** otherwise press **MENU/ESC** thencome out from menu.	L-CAP ↵ 001.00

ANALOG SETUP

This menu will help you to calibrate Analog output.To access Analog setup menu, navigate to menu using up key and select A-Set and press **ENTER/TARE**.

S.No.	Instruction	Display
1.	• Navigate to *Analog output check (A-CHC)* and press **ENTER/TARE**. • Here enter the weight value, and then it gives the corresponding output.	A-CHC ↵ 000.00
2.	• Navigate to *Analog High (A-HI)* and press **ENTER/TARE**. • The value which is going to send to DAC for 20mA has to be entered here. • Range is (0 to 6553).	A-HI ↵ 05491
3.	• Navigate to *Analog Low (A-Lo)* and press **ENTER/TARE**. • The value which is going to sent to DAC for 0 mA (or) 4 mA has to be entered here. • If Analog selection is 0-20 (or) 0-10 then The range is (0 to 6553). • If Analog selection is 4-20 (or) 2-10 then The range is (0 to 6553).	A-Lo ↵ 01092

4.	• Navigate to *Analog Default Value (A-dEF)* and press **ENTER/TARE**. • This provides safety to Analog Output during error conditions. The user can select what value of Analog Output should be during error conditions. The available modes are, • Low Value (4 mA / 0 mA) -> 'Lo'. • High Value (above 20 mA i.e.,22.05 mA) -> 'HI9H'. • Value at Previous stage -> 'LASt'.	A-dEF ↵ Lo
5.	• Navigate to *Analog Offset (A-oFF)* and press **ENTER/TARE**. • This provides the Analog Output starts range. Here, user can set the positive or negative offset. • Before entering into "**A-oFF"** press left key to Select positive ("pos") or negative ("nEg") analog offset. "nEg"means –ve LED will be On. The available modes are, • If the offset is "pos" means then analog output range starts from positive 001.00 kg to analog span value. • If the offset is "nEg" means then analog output range starts from negative 001.00 kg to analog span value.	A-oFF ↵ 001.00
6.	• Navigate to *Analog Span (A-Spn)* and press **ENTER/TARE**. • This provides the Analog Output end range. Here, user can set the weight at which can get the max analog output. • This menu is restricted to the max capacity value under calibration.	A-SPn ↵ 010.00

SETUP

To access General setup menu, navigate to menu ->SETUP and press **ENTER/TARE**.

S.No	Instruction	Display
1.	• Navigate to ADC Filter (adc-f) and press **ENTER/TARE.** • User can enter the filter value here with range of (1-9). It is used to reduce fluctuations due to sudden load impacts.	Adc-f ↵ 1
2.	• Navigate to moving Average (m-avg) and press **ENTER/TARE.** User can enter the Moving average value here with range of (1-100).	N-aUg ↵ 10
3.	• Navigate to *Password (PASS)* and press **ENTER/TARE**. • Enter the password you want to use, using UP and LEFT keys and press ENTER key to store & activate it. This is three-digit password. Default password is '000'.	PASS ↵ 000
4.	• Navigate to *Auto zero (Aut-0)* and press **ENTER/TARE**. • The available Auto Zero value in engineering count value is from 0 to 9. • If we enter 5, when weight is Zero, if the current weight deviation from 0 value in either positive or negative is less than or equal to (5 * Resolution), then the system will take the Current weight value as 0. The 0 value disables the Auto Zero. Auto Zero Function is used to avoid drift error.	AUt-0 ↵ 5
5.	• Navigate to *Tare Enable/Disable (t-Ed)* and press **ENTER/TARE**. • This is to enable or disable the tare when normal process.	t-Ed ↵ Enb

COMMUNICATION SETUP

To access Serial communication setup menu, navigate to menu ->S-Conand press **ENTER/TARE**.

S.No.	Instruction	Display
1.	• Navigate to *Device ID (d-Id)* and press **ENTER/TARE**. Enter the Device ID (1-99). It is required to identify the system, in case of multiple systems are deployed.	d-Id ↵ 01
2.	• Navigate to *Baud Rate (bAUd)* and press **ENTER/TARE**. • It is used to set the communication between unit and host device. It is settable between 2400, 4800, 9600, 19200, 38400, 57600, 115200bps.	bAUd ↵ 9600
3.	• Navigate to *Communication mode (C-nod)* and press **ENTER/TARE**. • Available modes are, ○ Request mode ○ Dump mode ○ ModBusRTU mode ○ ModBus ASCII mode • Refer Serial Communication protocol section.	C-nod ↵ n-bUS
4.	• Navigate to OFFSET(OFFSE) and press **ENTER/TARE.** • User can enter the OFFSET value here with range of (00000-49999).	OFFSE ↵ 00000

SYSTEM CHECK (TEST)

To access System check menu, navigate to menu -> tESt and press **ENTER/TARE**.

S.No.	Instruction	Display
1.	• Navigate to*Raw ADC (r-AdC)* and press **ENTER/TARE**. • Raw ADC counts corresponding to load cell is displayed.	r-AdC ↵ 1716
2.	• Navigate to *Restore Calibration (rECAL)* and press **ENTER/TARE**. • On pressing '**ENTER/TARE**' Key, system asks confirmation. If ENTER key is pressed, Original Calibration values are restored.	rECAL ↵ ConF?
3.	• Navigate to *Load default (L-dF)* and press **ENTER/TARE**. • It will ask the password to conform to load default. On entering the correct password, system asks confirmation. If ENTER key is pressed, System loads the factory set defaults to Calibration, Analog setup, Serial Communication setup and System check Parameters and also in to the memory.	L-dF ↵ 000
4.	• Navigate to *Display check (dis-c)* and press **ENTER/TARE**. • The all LED will be ON at the same time, for checking purpose.	dis-c ↵ 88888
5.	• Navigate to*DIO check (dIo)* and press **ENTER/TARE**. • Navigate to "t-doP" to test digital output. Output can be checked by pressing Up key. Navigate to "t-dIp" to test digital input.	dIo ↵ t-dIp t-dop

Serial Communication Protocol

The communication protocols used are a) Request mode b) Dump mode c) Modbus RTU mode d) Modbus ASCII mode

Note: Modbus RTU mode implemented and tested with Simply modbus Software, Modscan32,Modbus tester.

Communication settings:

Parity : **None ;** Data Bits: **8 ;** Stop Bits: 1 ; Flow Control: None

Baud rate is settable under setup.

Request Mode:

If the Communication mode (C-nod), under setup is "rE9" then the below protocol will dump one time based on the request from PC. **Baud rate is settable under setup.**

Request	Response
%XXR$	% XX [Y Z WWWWW] $

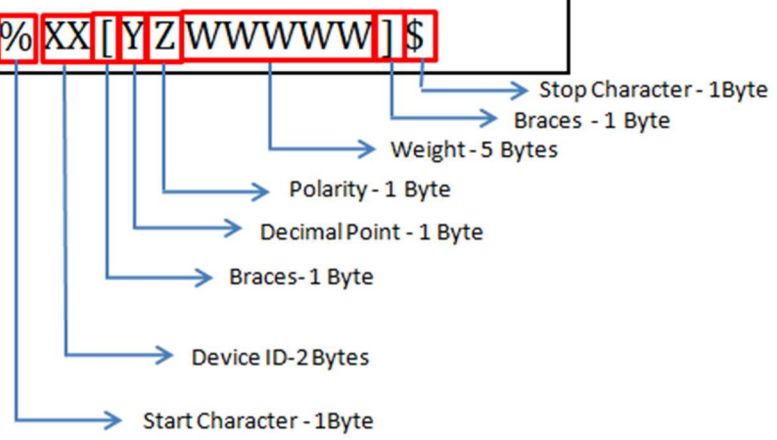

For Error condition weight value,

Over Range (**OR)**Weight value is 99999.

Over Capacity (**OC)**Weight value is 88888.

Under Range (**UR)**Weight value is 77777.

Dump Mode:

- If the Communication mode (C-nod), under setup is "dUmp" then the below protocol will dump continuously (Same as request mode response). **Baud rate is settable under setup.**

%XX[YZWWWWW]$

Modbus ASCII Mode:

- If the Communication mode (C-nod), under setup is "n-ASC" then the below protocol will receive based on request. All the parameters in the protocols should be in hex format.
- The Modbus ASCII mode having the same address of Modbus RTU.

FOR READ OPERATION:

For ASCII mode read operation protocol, the example format is given below,

Request: Eg - Request for Maximum Capacity: 010300030001F8

Start Char	Device Id	Read Command	Address	No. of Registers	LRC	Stop Char
1 Byte (:)	1 Byte (01)	1 Byte (03)	2 Bytes (0003)	2 Bytes (0001)	1 Byte (F8)	1 Byte (CRLF)

Response:

Start Char	Device Id	Read Command	No. of Bytes to send	Data	LRC	Stop Char
1 Byte (:)	1 Byte (01)	1 Byte (03)	1 Byte (04)	2 Bytes (07d0)	1 Byte (e3)	1 Byte (CRLF)

FOR WRITE OPERATION:

For ASCII mode write operation protocol, the example format is given below,

Request:

Start Char	Device Id	Read Command	Address	Data	LRC	Stop Char
1 Byte (:)	1 Byte (01)	1 Byte (06)	2 Byte (0064)	2 Bytes (0000)	1 Byte (95)	1 Byte (CRLF)

Response:

If the write operation is successfully done then the response will be same as that of request.

Modbus RTU Mode:

- If the Communication mode (C-nod), under setup is "n-rtu" then the below protocol will receive based on request. All the parameters in the protocols should be in hex format. **Baud rate is settable under setup.**
- Read operation can be performed for all address values and Write operation can be done only for2,3,5,100,101,102,103,104,105,106,107,108,109,200,201,202,203,204,205,206,207,300,301.

Default the offset value is 00000.

In **menu** toselect**485 setup menu ->**to change the **offset value.**

The offset value 40000 means 40000 is Max Capacity address for read operation, 40000 is Max Capacity address for write operation.

S.NO	ADDRESSES	PARAMETER	FUNCTION
1	0	RAW ADC	(LSB OF RAW ADC) **R**
2	1	RAW ADC	(MSB OF RAW ADC) **R**
3	2	PEAK VALUE	(LSB OF PEAK VALUE) **R**
4	3	PEAK VALUE	(MSB OF PEAK VALUE) **R**
5	4	STATUS	**R**
6	5	TARE-CURRENT WEIGHT	**R-W(WRITE '0'TO TARE THE WEIGHT)**
7	6	CURRENT WEIGHT	(LSB OF CURRENT WEIGHT) **R**
8	7	CURRENT WEIGHT	(MSB OF CURRENT WEIGHT) **R**
S.NO	**ADDRESSES**	**PARAMETER**	**FUNCTION**
1	100	MAX CAPACITY	(LSB OF MAX CAPACITY) **R-W**
2	101	MAX CAPACITY	(MSB OF MAX CAPACITY) **R-W**
3	102	DECIMAL POINT	(0-3)**R-W**
4	103	RESOLUTION	(1,2,5,10,20,50,100)**R-W**
5	104	CAL ZERO	(LSB OF CAL ZERO) **R-W**
6	105	CAL ZERO	(MSB OF CAL ZERO) **R-W**
7	106	CAL SPAN	(LSB OF CAL SPAN) **R-W**
8	107	CAL SPAN	(MSB OF CAL SPAN) **R-W**
9	108	CAL CAPACITY	(LSB OF CAL CAPACITY) **R-W**
10	109	CAL CAPACITY	(MSB OF CAL CAPACITY) **R-W**
S.NO	**ADDRESSES**	**PARAMETER**	**FUNCTION**
1	200	ANALOG HIGH	**LSB R/W**
2	201	ANALOG HIGH	**MSB R/W**
3	202	ANALOG LOW	**LSB R/W**
4	203	ANALOG LOW	**MSB R/W**
5	204	ANALOG OFFSET	**LSB R/W**
6	205	ANALOG OFFSET	**MSB R/W**
7	206	ANALOG SPAN	**LSB R/W**
8	207	ANALOG SPAN	**MSB R/W**
S.NO	**ADDRESSES**	**PARAMETER**	**FUNCTION**
1	300	ADC-FILTER	R-W
2	301	MOV-AVG	R-W
3	302	AUTO ZERO	**R**
4	303	TARE EN/DI	**R**
S.NO	**ADDRESSES**	**PARAMETER**	**FUNCTION**

1	400	DEVICE ID	**R**
2	401	BAUD RATE	**R**
3	402	COM MODE	**R**
4	403	OFFSET	(LSB OF OFFSET) **R**
5	404	OFFSET	(MSB OF OFFSET) **R**

FOR READ OPERATION:

Request: Example - Request for Resolution is 01 03 9C 41 00 01 D5CA

Device Id	Read Command	Address	No. of Registers	CRC
1 Byte (01)	**1 Byte (03)**	**2 Bytes (9C41)**	**2 Bytes (0001)**	**2 Bytes (D5CA)**

Response: Example - Response for Resolution is 01 03 04 00 02D9 84

Device Id	Read Command	No. of Bytes to send	Data	CRC
1 Byte (01)	**1 Byte (03)**	**1 Byte (02)**	**2 Bytes (0002)**	**2 Byte (D984)**

Each request and response will end with CRC values.

FOR WRITE OPERATION:

Request: Example - Request for write Cal-Capacity is 0106**9C 41 00 03** 6E51

Device Id	Write Command	Address	Data	CRC
1 Byte	**1 Byte (06)**	**2 Bytes**	**2 Bytes**	**2 Byte**

Response:

Response received is as same as that of request.

Troubleshooting

S. No	Problem	Reason	Solution
1.	No Display	Power line to the control unit might be faulty.	Check the power cable continuity.
2.	Weight fluctuations	24 DC. Voltage fluctuations.	Check the Line Input Voltage.
		Improper earth.	Check the earth cable or earth.
		Load cell loose contact.	Check cable between load cell &main PCB.
		Over load stopper touching the Load cell.	Avoid over loading or check the Load cell.
		Improper calibration	Re – calibration properly.
3.	Weight Variation	Improper load cell connection.	• Check the Load cell mounting "ALLEN" Screws. • Check whether any other material is touching the weigh platform. • Check whether over load stopper is touching the Load cell.
4.	Communication not working	• Improper wiring connection • Loose contact • Electrical damage	• Check the communication cable.

Error Messages

S.No.	Error Code	Description
1.	**-oC-**	If the value of current weight or displacement exceeds the [Maximum load capacity or Maximum displacement value + (9 * resolution)], then "OC" is displayed.
2.	**oPEn**	If the value of load cell exceeds its range or if the load cell disconnected, "or" is displayed. Or If the value of load cell under ranged, "ur" is displayed.
3.	**PASEr**	If the entered password was wrong then this error message will display. Please enter the correct password.
4.	**U-Err**	If the entered value exceeds the limit then this error message will display. Please enter the correct value.
5.	**S-Err**	If the entered cal span is not more than the cal zero + 50 value then the system will display this error message.
6.	**C-Err**	If calibration back not taken then this error message will display.
7.	**C-dIS**	Calibration menu access disabled.